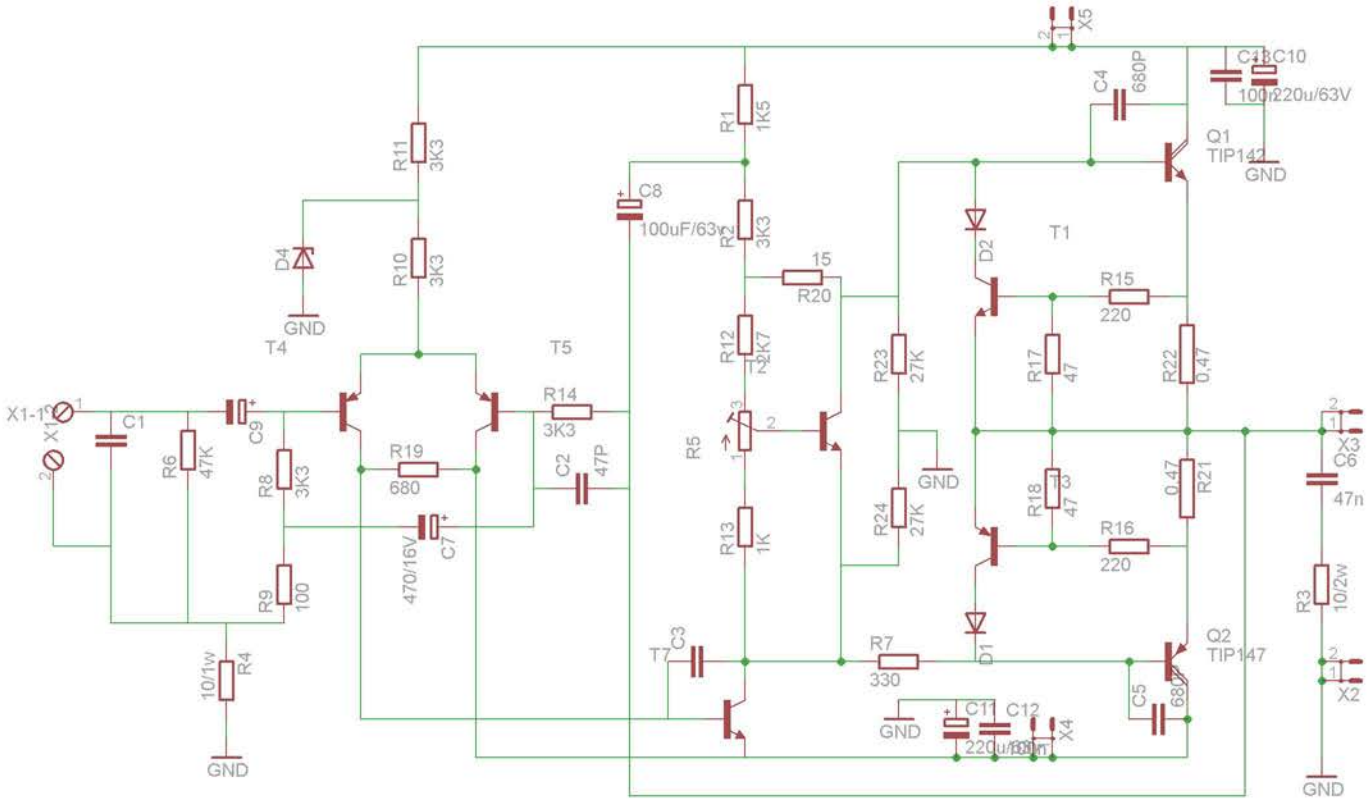
X1-1
X1
C1
R6
47K
C9
R8
3K3
R9
100
R4
10/1w
GND
R11
3K3
R10
3K3
D4
GND
T4
T5
R19
680
C7
470/16V
R14
3K3
C2
47P
C8
100uF/63v
R1
1K5
R2
3K3
R12
2K7
T2
R5
R13
1K
T7
C3
R20
15
R23
27K
R24
27K
GND
R7
330
D1
D2
T1
R15
220
R17
47
R18
47
T3
R16
220
R22
0,47
R21
0,47
Q1
TIP142
Q2
TIP147
C4
680P
C13
C10
100n
220u/63V
X5
X3
C6
47n
R3
10/2w
X2
C5
680P
C11
C12
220u/63v
X4

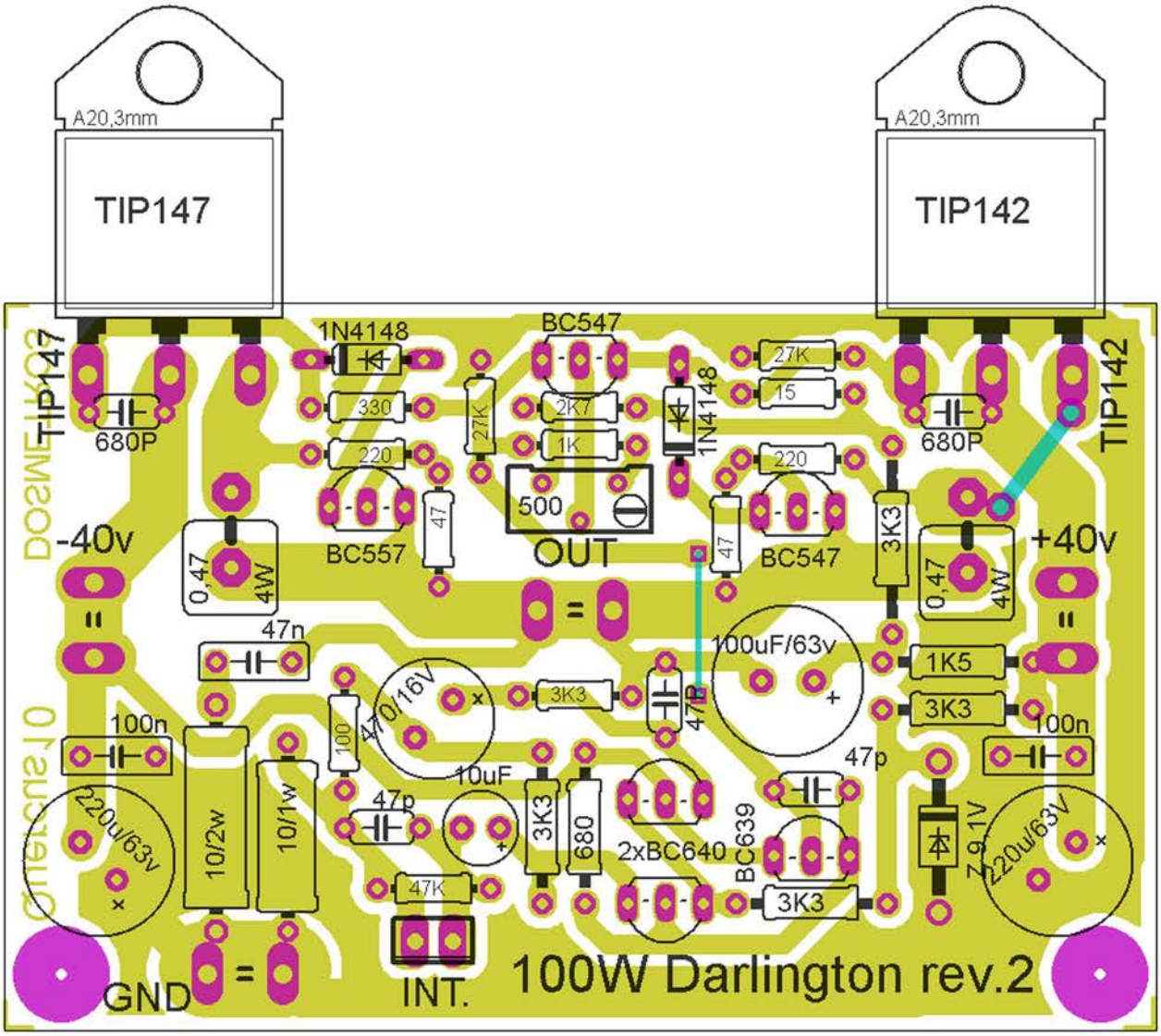
A20,3mm
TIP147
A20,3mm
TIP142
TIP147
TIP142
680P
680P
1N4148
330
220
BC557
47
BC547
2K7
1K
27K
500
OUT
1N4148
27K
15
220
BC547
47
3K3
0,47
4W
0,47
4W
-40v
+40v
47n
100uF/63v
1K5
3K3
100n
100n
470/16V
3K3
47P
100
10uF
47p
47p
220u/63v
10/2w
10/1w
3K3
680
2xBC640
BC639
3K3
Z 9,1V
220u/63V
47K
GND
INT.
100W Darlington rev.2

DOSMETROS
Q.Nefcus.10

DOSMETROS
Q.Nefcus.10

2.ver notgnilpmA DW001
INT.
GND
+Vcc
OUT
IN

2.ver notgnilpmA DW001
INT.
GND
+Vcc
OUT
IN